HARDWARE

072-000090

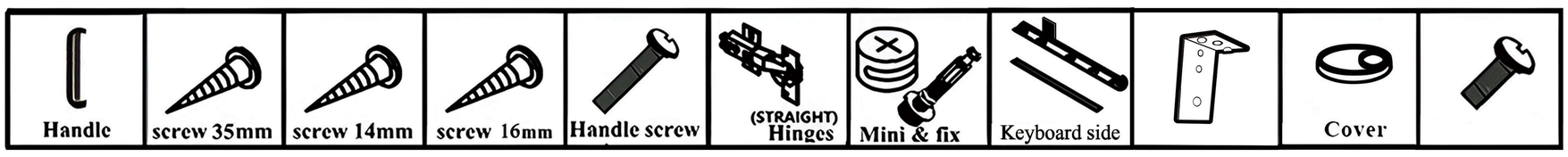

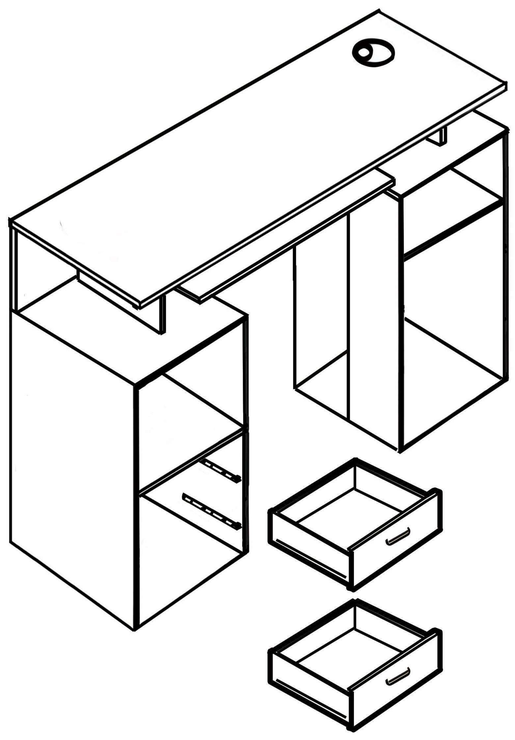

Step:1

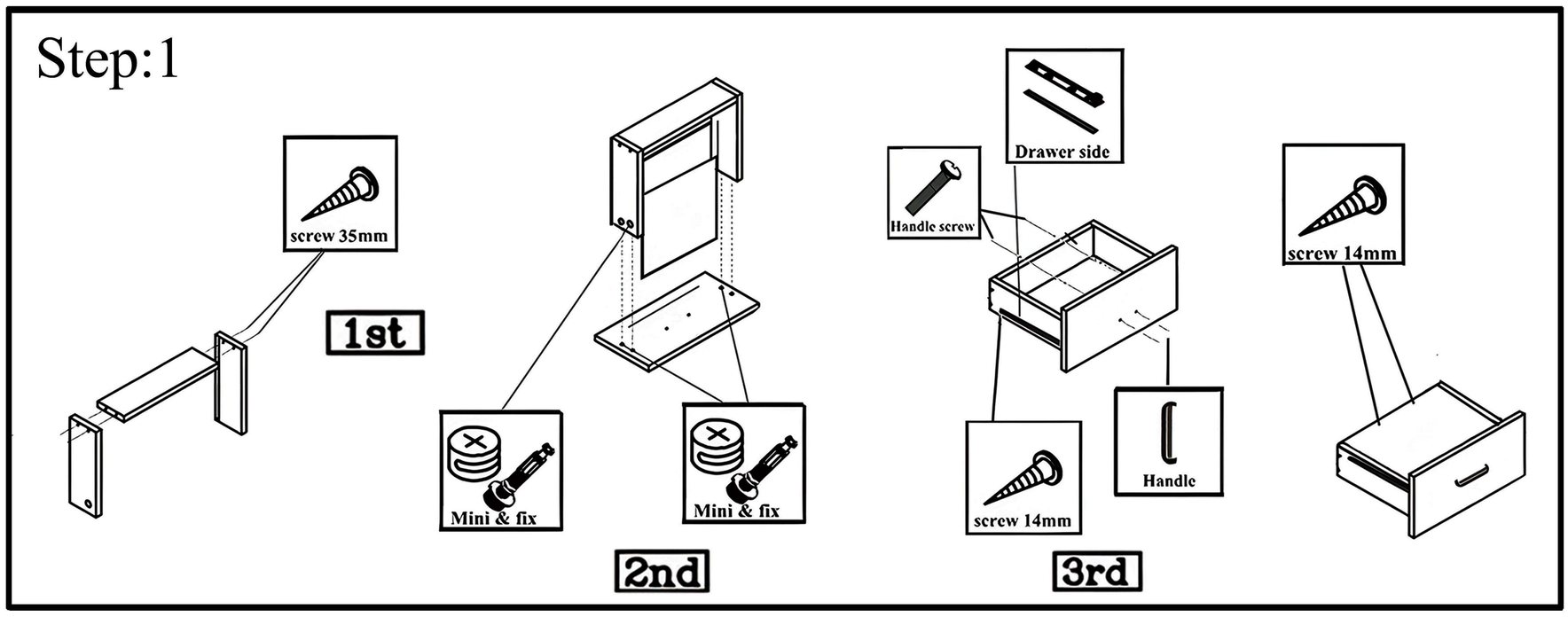

Step:2

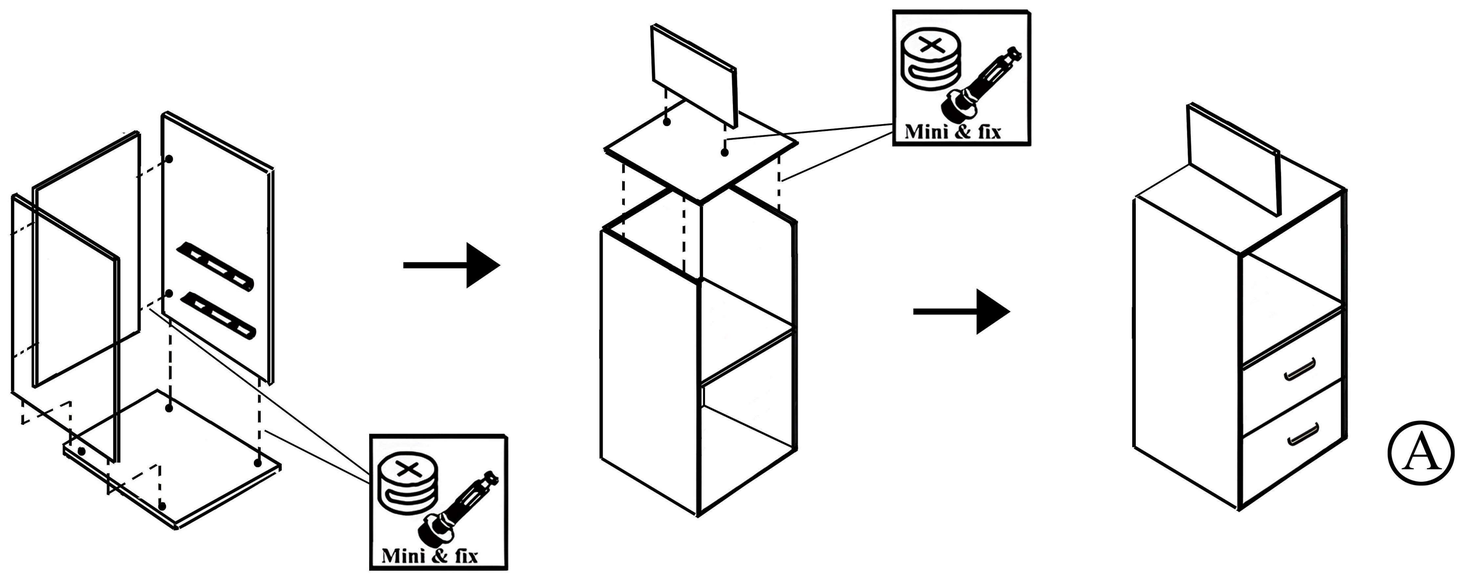

Step:3

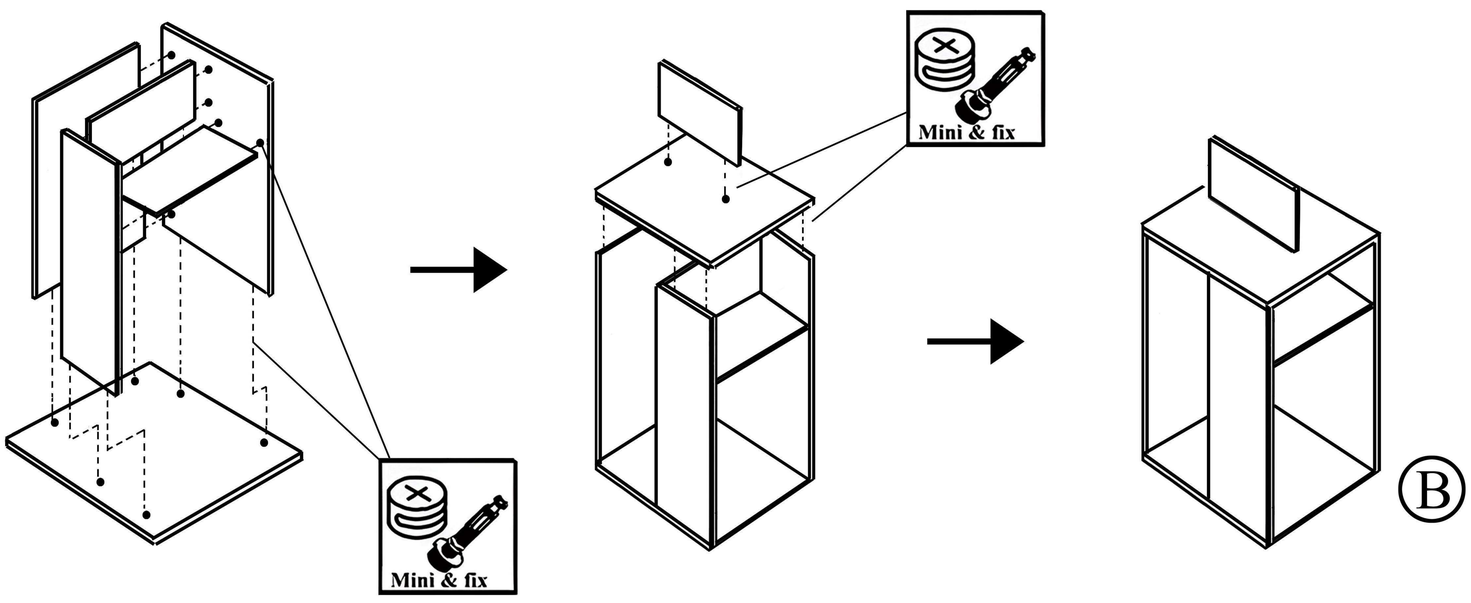

Step:4

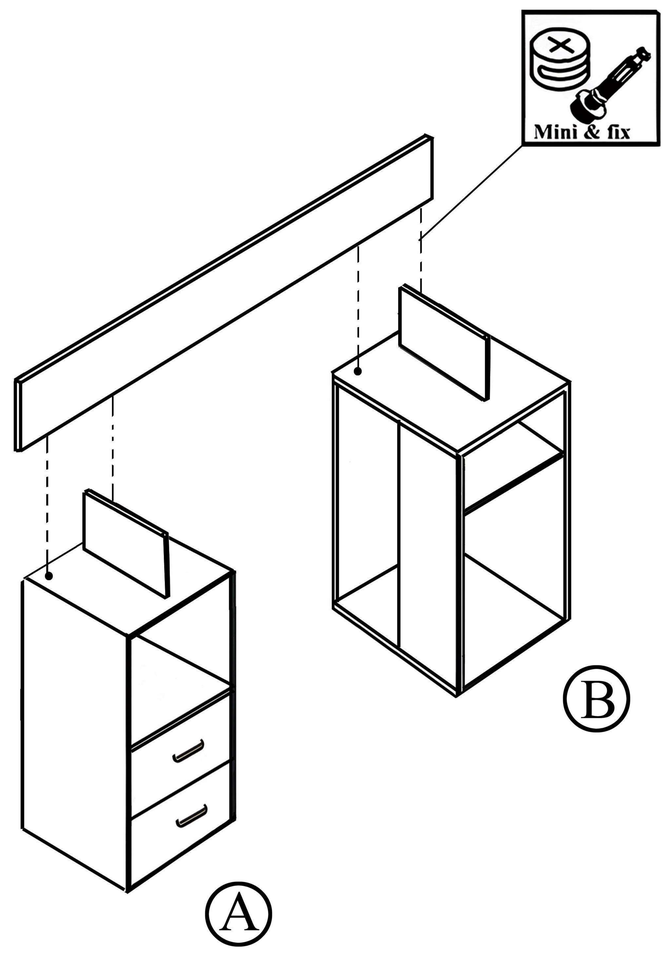

Step:5

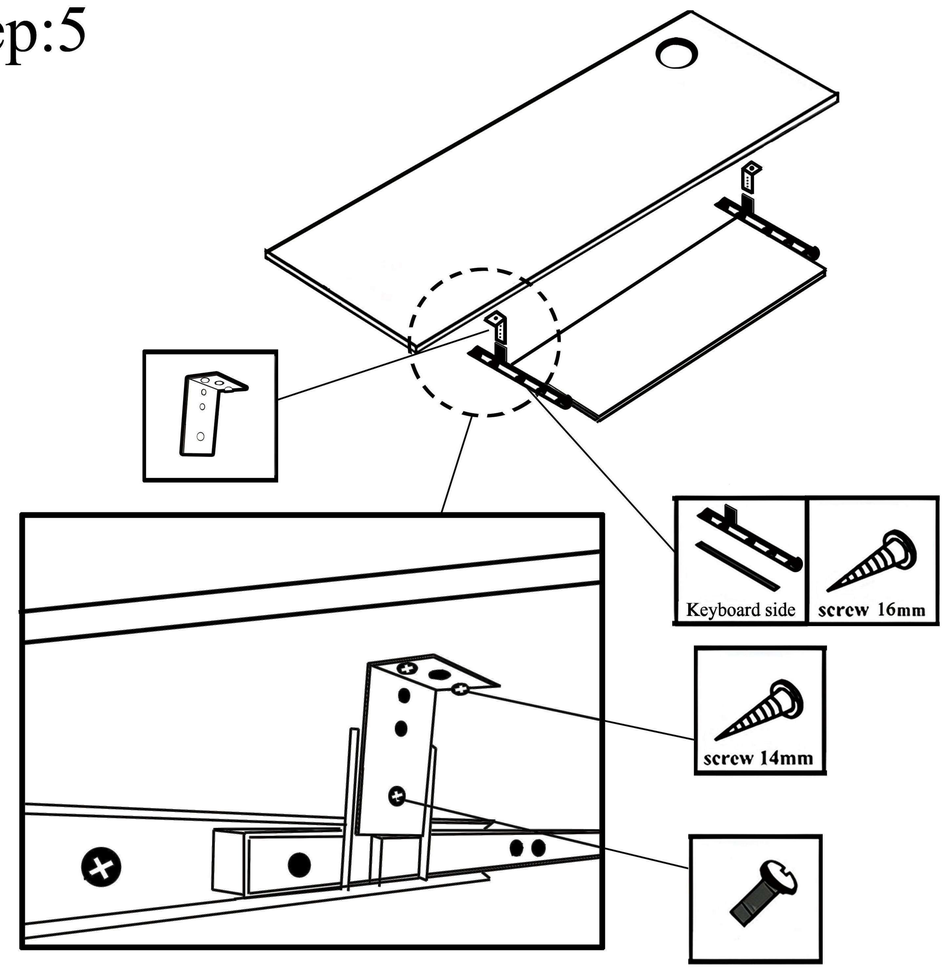

Step:6

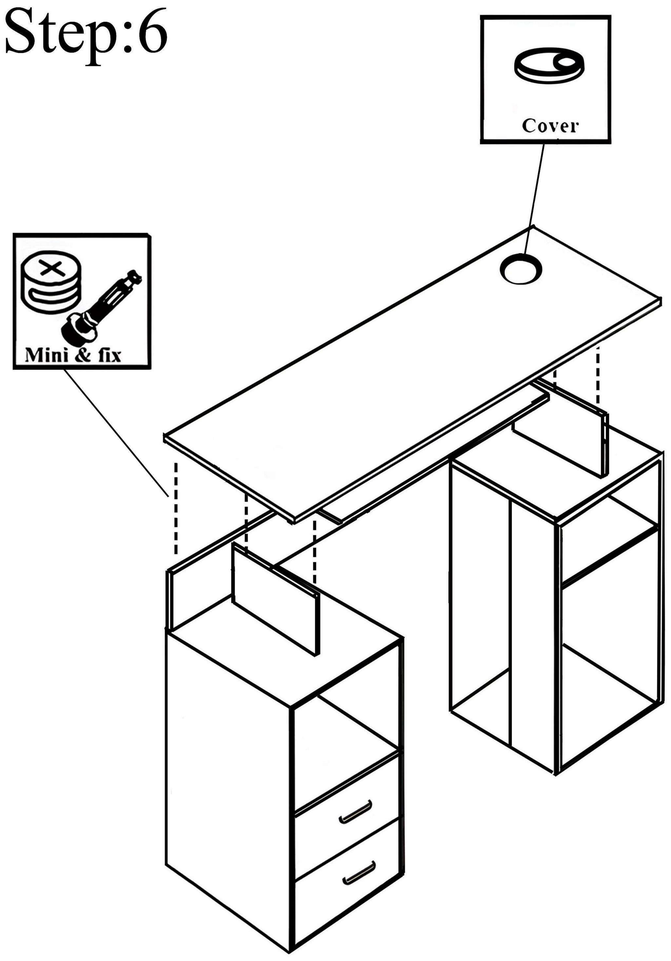

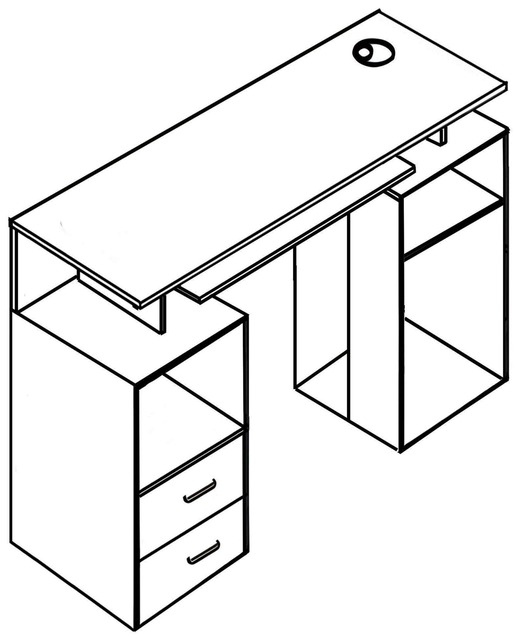

ASSEMBLY FINISH